

Homeowners electrical wiring guide

(Includes 2024 Canadian Electrical Code amendments)

Last updated: September 2026

26-0055527-CRV-46370

Table of contents

Required inspections 4

Rough inspections
(all work not visible for final inspection) 4

Final inspection
(electrical complete) 4

Possible Outcomes 4

Panelboards (service and sub-panels) 5

Non-metallic sheathed cable (NMD90) and Armoured cable (AC-90)
branch circuit wiring installations 6

Fittings, devices and junction boxes 8

Lighting and fixtures 9

Neutral at every device box 9

Three-way wiring configuration 10

Receptacles (outlets) 11

Branch Circuit wiring requirement 12

Ground fault protection (GFCI) 13

Typical outlet 13

Arc-fault protection 14

Legacy panel, armoured cable 15

Underground installations 16

Use of approved electrical equipment 17

In-floor heating raceway requirements 18

Copyright ©2026 All rights reserved. The City of Calgary

- The City of Calgary owns the intellectual property rights, including copyright, for the entire publication and all text, graphics, and images within the publication.
- This publication is protected by Canadian and international copyright and trademark laws. Unauthorized use of any or all of the publication violates copyright, trademark and other laws.
- Copying, repackaging, redistributing or modifying any or all of the publication, in printed or electronic format, is strictly prohibited.
- Please seek the prior written consent of The City of Calgary if you wish to use, copy, repackage or redistribute the text, graphics, images, or any or all of this publication.

Homeowner electrical wiring guide

(Includes 2024 Canadian Electrical Code amendments)

This document is only a guide. Other methods of installation may be acceptable, but must meet the minimum requirements of the current Canadian Electrical Code.

Homeowners are required to have a basic knowledge of electrical wiring.

Homeowners are not permitted to:

- obtain a permit for concealed wiring;
- install, alter or modify the main electrical service, including the main panel, main breaker, transfer switches or the meter base;
- adding transfer switches as the installation would require changes at the service;
- install electrical wiring in permanent, in-ground hot tubs and swimming pools;
- install or alter solar photovoltaic systems;
- install battery-based energy storage systems;
- install electrical vehicle charging systems;
- install electrical vehicle energy management systems (EVEMS) or load management systems;
- install electrical for air conditioning units;
- do load calculations must be completed by a qualified electrician,
- have contractors work under a homeowners permit, contractors must obtain their own permits, and
- complete fire remediation repairs.

Find more information on when permits are required please visit our website **calgary.ca/myhome**

To connect with us contact our Technical Assistance Centre by calling us at **403-268-5311**.

Copyright ©2026 The City of Calgary. This information has no legal status and cannot be used as an official interpretation of the various bylaws, codes and regulations currently in effect. The City of Calgary accepts no responsibility to persons relying solely on this information. This document is updated periodically.

Required inspections

Homeowner permits require a minimum of two inspections, rough and final.
The electrical inspection is separate from plumbing and building permit inspections.

- Please visit **inspections.calgary.ca** and sign in with your myID to schedule, reschedule or cancel your inspection.
- Access must be arranged by the homeowner and someone 18 years or older must be present.
- Inspections will either be in the morning (between 8 a.m. and noon), or in the afternoon (between noon and 4:30 p.m.). You will receive a confirmation email the day of inspection. Inspections are conducted from Monday to Friday, excluding holidays.

Rough inspections
(all work not visible for final inspection)

- Have all wiring and interior of outlet boxes readily visible.
- Remove vapour barrier and insulation where it's covering any wiring. The exception is for wiring fished into walls.
- All wiring must be supported.
- Remove outer sheath of wiring and terminate all wiring into outlet boxes and fixtures.
- Ensure all splices are made and all grounding is complete in outlet boxes and fixtures.
- Do not secure devices (plugs, switches) to outlet boxes. Leave all wiring and terminations visible.
- Cables may be terminated into the panelboard, but wires should not be terminated on breakers.
- Never energize exposed wiring.
- Rough and underground inspections should be combined.
- Direct buried conductors, cables or raceways must be exposed.
- Access must be provided to all areas where electrical work has been completed.
- For secondary suites, use the **secondary suite electrical load calculation sheet** to ensure your current electrical service is adequate. Load calculations needs to be completed by quaified electricans. When complete, please email the form to **electrical.inspection@calgary.ca**. If the main electrical service must be increased from 60 amps, 100 amps, or 200 - amp service, please have your Contractor contact ENMAX at **getconnected@enmax.com**.

Final inspection
(electrical complete)

- Access must be provided to all areas where electrical work has been completed.
- Do not have any exposed live wiring.
- Install all devices, receptacles, cover plates and light fixtures.
- Any open outlet boxes or unfinished wiring must be properly secured and installed in a junction box with an approved splice cap and a junction box cover.
- Install, terminate and energize all breakers, if safe to do so.
- Complete the panelboard breaker directory, all breakers must be labeled correctly.
- A permit services report will be produced once all inspections are completed. The report summarizes inspection outcomes and explains the resulting permit condition(s). You can request a report by logging into **calgary.ca/inspections** or contacting the Planning Services Centre **calgary.ca/pdcontact**

Possible Outcomes

The Electrical Safety Codes Officer will advise of the inspection outcome. There are three possible outcomes:

- **Acceptable:** Continue with installation;
- **Verification of compliance (VOC):** Correct deficiencies and return a signed copy to **electrical.TAC@calgary.ca** within 30 days before proceeding with the installation, and
- **Not acceptable:** re-inspection will be required before continuing with installation.

Copyright ©2026 The City of Calgary. This information has no legal status and cannot be used as an official interpretation of the various bylaws, codes and regulations currently in effect. The City of Calgary accepts no responsibility to persons relying solely on this information. This document is updated periodically.

Panelboards (service and sub-panels)

DO	DO NOT
▪ Have 1 m clearance with secure footing in front. ▪ Have adequate lighting. ▪ Have minimum headroom of 2.2 m. ▪ Identify all branch circuits to what they serve.	▪ Put sub-panels in clothes closets, bathrooms or stairways. ▪ Have any breaker more than 1.7 m above the floor. ▪ Relocate or change the main panelboard.

(Elevation view of working space around electrical equipment - see Figure 1)

Figure 1

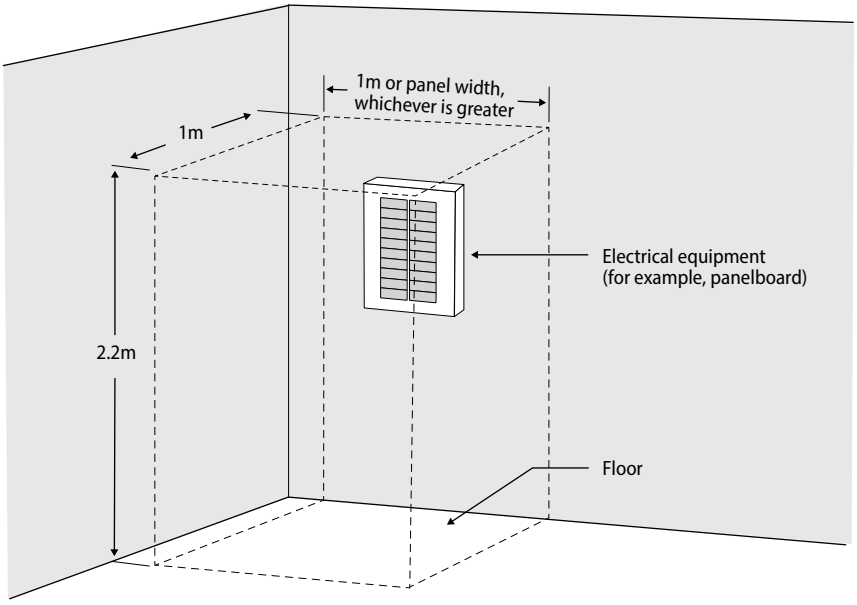

= Working space

Note: The 1m working space can be in either direction. The electrical equipment is not required to be centred in the 1m width of working space.

Figure 2

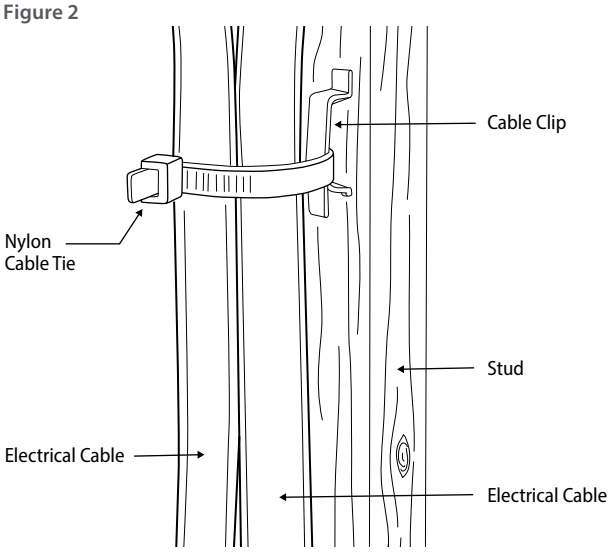

Copyright ©2026 The City of Calgary. This information has no legal status and cannot be used as an official interpretation of the various bylaws, codes and regulations currently in effect. The City of Calgary accepts no responsibility to persons relying solely on this information. This document is updated periodically.

Non-metallic sheathed cable (NMD90) and Armoured cable (AC-90) branch circuit wiring installations

- Support cables with correctly sized straps or staples within 300 mm of an outlet box and at intervals of 1.5 m thereafter (see Figure 3).
- An approved mechanical protection plate is required where cables are (see Figure 4):
  - within 32 mm of the stud/joist face surface, or
  - subject to damage from nails or screws where located behind baseboards or cupboards.
- Cables require a minimum separation of 25 mm from heating ducts.
- Communication (TV, phone, speaker) cables require a minimum separation of 50 mm from power and lighting cables.
- Do not fish NMD90 cable into walls with metal studs.
- A minimum 150 mm of conductor length is required in boxes.
- 240V loads such as electric heating, etc. should use NMD90 cables with a red outer jacket.
- If there are more then 2 cables use this method, (see Figure 2).
- NMD90 cable run through metal studs will require approved bushings or grommets, to protect the wire from sharp edges.
- Exposed cables within 1.5 m of the floor require mechanical protection (see Figure 6).
- NMD90 cables are required to be protected in both concealed and non-concealed locations (see Figure6).

Figure 3

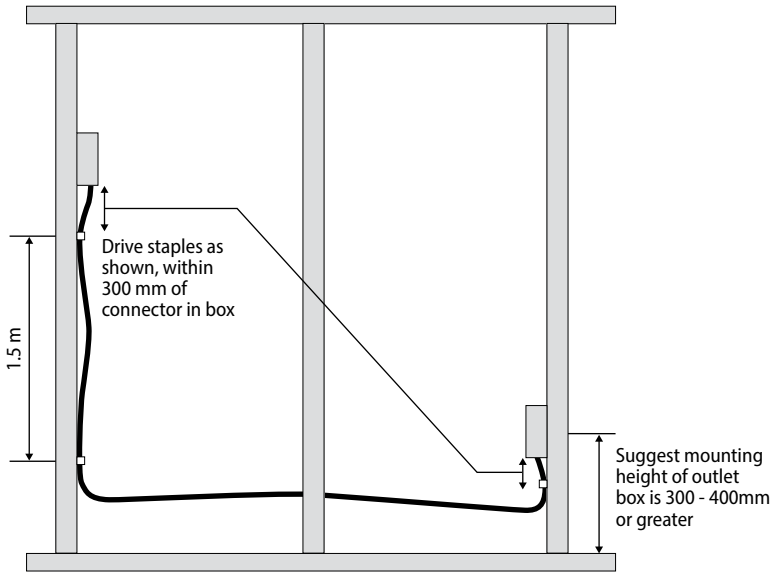

Figure 4

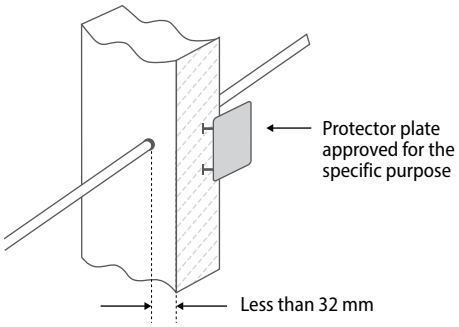

Copyright ©2026 The City of Calgary. This information has no legal status and cannot be used as an official interpretation of the various bylaws, codes and regulations currently in effect. The City of Calgary accepts no responsibility to persons relying solely on this information. This document is updated periodically.

Figure 5

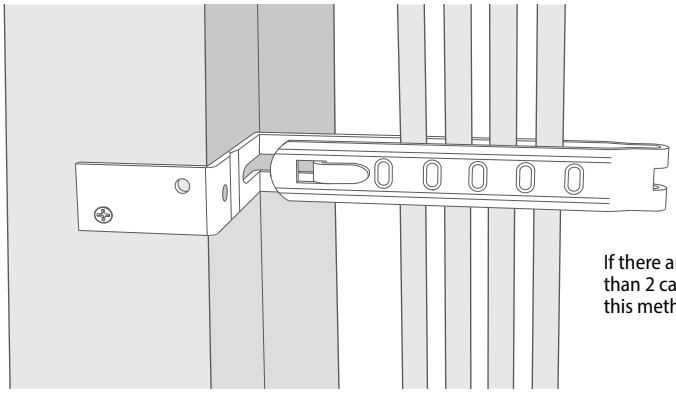

If there are more than 2 cables use this method

Figure 6

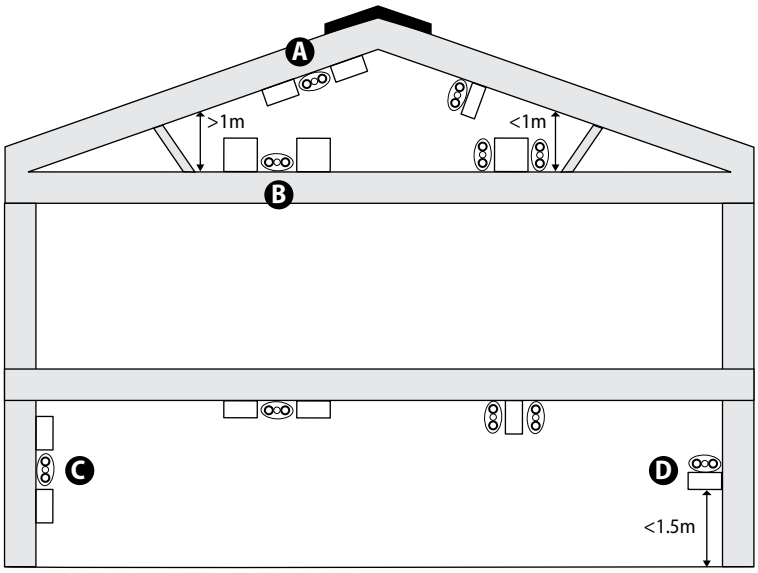

Guard strips on either side on NMD90

- A 19mm x 38mm
- B maximum 38mm x 38mm
- C Open face of wall stud
- D 1.5m above floor

Copyright ©2026 The City of Calgary. This information has no legal status and cannot be used as an official interpretation of the various bylaws, codes and regulations currently in effect. The City of Calgary accepts no responsibility to persons relying solely on this information. This document is updated periodically.

Fittings, devices and junction boxes

- Fasten all outlet boxes securely in place.
- Install all device boxes flush to the finished wall.
- Ceiling fan outlet boxes shall be marked for fan support.
- Unused openings in boxes and panels shall be closed with approved covers.
- Device boxes mounted on metal studs must be approved.
- When used with lighting, vapour barriers must be approved for 90°C.
- The motor powering the hydro-massage bathtub requires access panels.
- Support grouped outlet boxes and outlet boxes that are greater than 100 mm on two sides.

The maximum number of conductors allowed in outlet boxes.
** Where a box contains a dimmer switch or a GFCI outlet, deduct an additional wire for each.

Box type	**Dimensions** H x W x D	**Box Volume** Milliliters	**Number of #14 AWG wires** (Black, white wires)
Octagon (Light)	4 x 1-1/2 deep	245ml	9 wires with 3 wire nuts
	3 x 2 x 2-1/8 deep	344ml	13 wires with 3 wire nuts
Plug or switch (Device)	3 x 2 x 2 deep	163ml	3 wires with 3 wire nuts and 1 device **
	3 x 2 x 2-1/2 deep	204ml	5 wires with 3 wire nuts and 1 device **
	3 x 2 x 3 deep	245ml	7 wires with 3 wire nuts and 1 device **
	2 gang 2-1/2 deep	409ml	11 wires with 3 wire nuts and 2 devices **
	2 gang 3" deep	491ml	15 wires with 3 wire nuts and 2 devices **
	3 gang 2-1/2 deep	614ml	18 wires with 3 wire nuts and 3 devices **
Plug or switch (Device)	4 x 1-1/2	344ml	14 wires. Deduct for wire nuts.
	4 x 2-1/8	491ml	20 wires. Deduct for wire nuts.

Copyright ©2026 The City of Calgary. This information has no legal status and cannot be used as an official interpretation of the various bylaws, codes and regulations currently in effect. The City of Calgary accepts no responsibility to persons relying solely on this information. This document is updated periodically.

Lighting and fixtures

Bare light bulb

- Do not install fixtures with a bare light bulb in clothes closets.
- Protect light fixtures that are less than 2.1 m high with a guard or by location.

Pot light

- Pot lights **not** marked "TYPE IC" must be at least 13 mm from combustible materials and 76 mm from insulation or in accordance with the manufacturer's instructions.
- You may be asked to remove a retrofit pot light installed after the rough inspection, to verify the installation.

Three-way switch

- Three-way switching is required at the top and bottom of stairways with four or more stairs that lead to a finished area or to an outside entrance.

Utility room

- Utility room lights shall be controlled by a wall switch at the entrance.
- The furnace disconnect switch must be accessible and labeled. Often when a basement is developed, the existing switch will need to be relocated (typically near the entrance to the utility room). This location is for emergency purposes, so access to the furnace disconnect switch must be reachable without passing the front of the furnace.

Bathtub/Shower stall

- Light switches must be more than 1 m away horizontally from a bathtub or shower stall. If not possible, they shall be at least 500 mm away and protected by a Ground Fault Circuit Interrupter (GFCI).
- A neutral (white) conductor shall be installed at every light switch outlet box.

Neutral at every device box

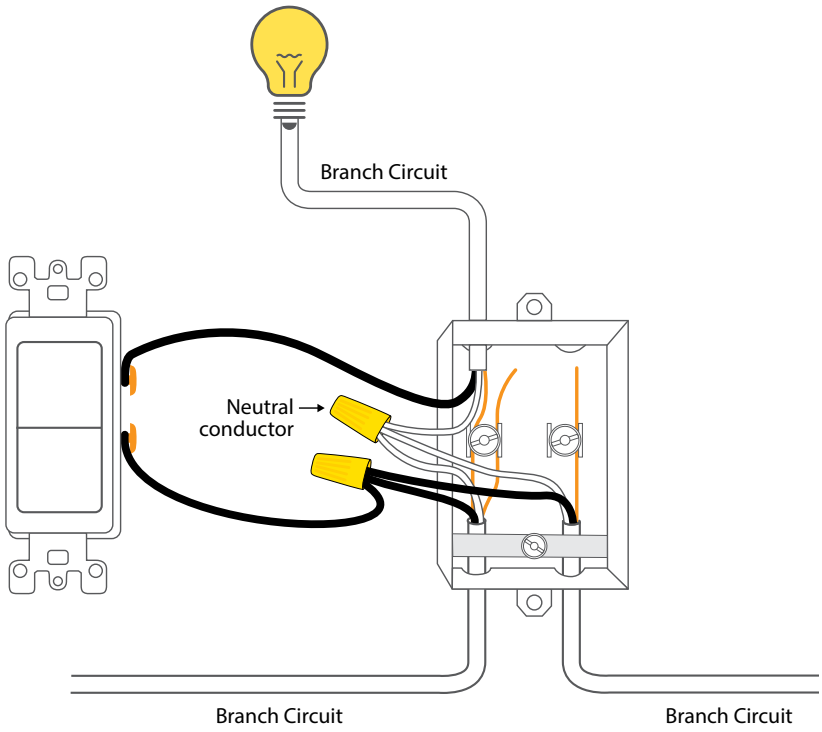

A neutral (white) conductor shall be installed at every light switch outlet box.

Copyright ©2026 The City of Calgary. This information has no legal status and cannot be used as an official interpretation of the various bylaws, codes and regulations currently in effect. The City of Calgary accepts no responsibility to persons relying solely on this information. This document is updated periodically.

Three-way wiring configuration

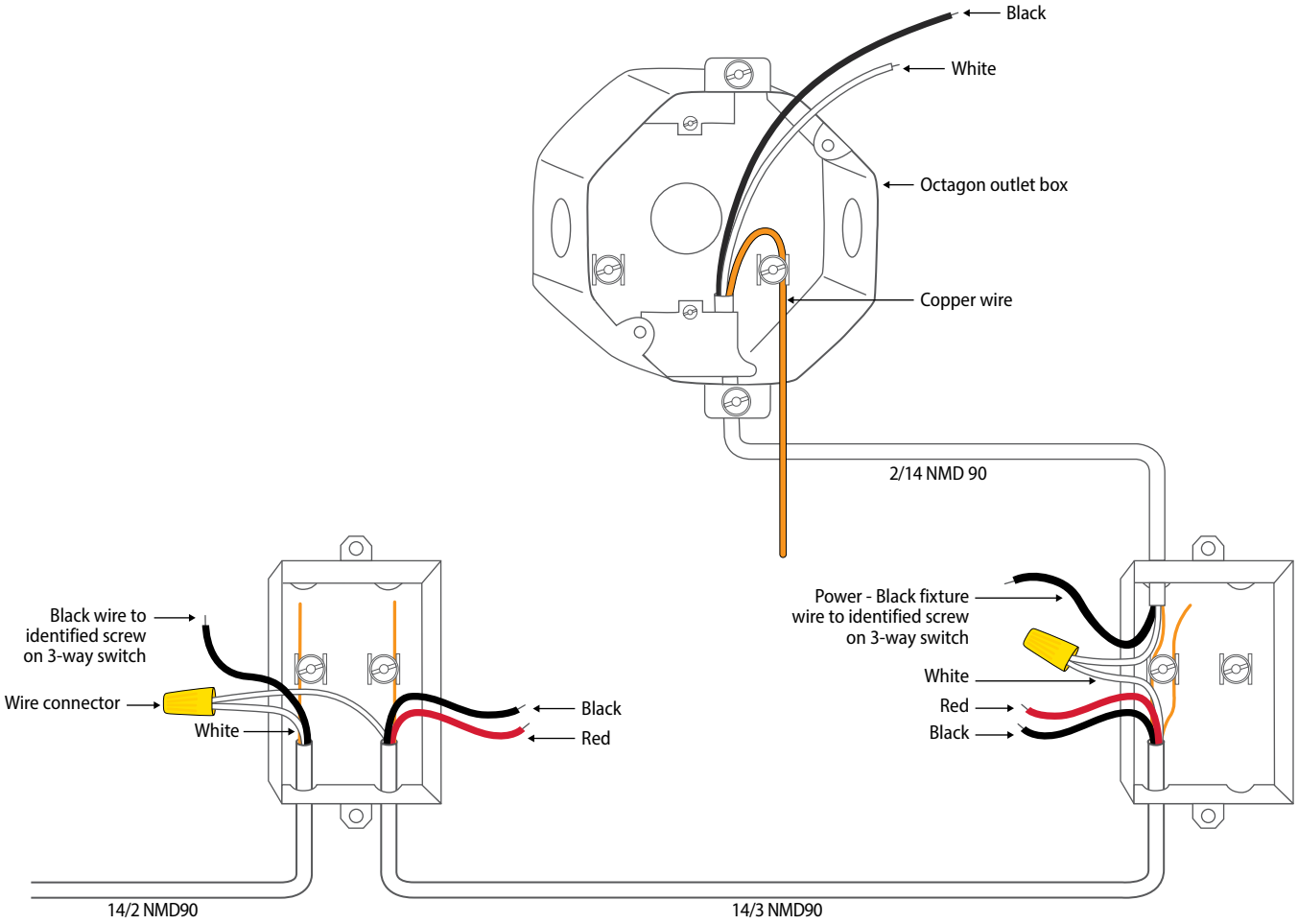

Copyright ©2026 The City of Calgary. This information has no legal status and cannot be used as an official interpretation of the various bylaws, codes and regulations currently in effect. The City of Calgary accepts no responsibility to persons relying solely on this information. This document is updated periodically.

Receptacles (outlets)

- Any outlet installed within 2 m from the floor must be tamper resistant.
- Outlets must be no more than 3.6 m apart in every open room and no more than 1.8 m from a door or closet. Any wall space of 900 mm or more in width requires an outlet.
- Outlets must be no more than 4.5 m apart in a hallway.
- No more than 12 outlets shall be on a branch circuit.
- In order to be included in the minimum outlet spacing requirements (shown in the diagram to the right), outlets must be installed no higher than 1.7m.
- Do not place outlets in a kitchen cupboard, cabinet or similar enclosure, except where the outlet is for a specific type of appliance that is suitable for installation within the enclosure (i.e. a microwave).

Kitchen

- Outlets must be no more than 1.8 m apart measured along the wall behind a counter top, and no more than 900 mm from a sink, stove or end point.
- Each fixed kitchen island or peninsula larger than 600 mm x 300 mm requires at least one outlet (15A split or 20A T-slot).
- Each gas stove requires a 120V outlet not more than 130 mm from the floor and as near midpoint as possible.
- A 14-50R stove outlet with #8 AWG wire must not exceed 130 mm to the center from the floor and as near midpoint as possible, with the U ground slot at the side.
- All 15A and 20A outlets installed within 1.5m of a sink in a kitchen must be GFCI protected

Kitchen Layout Example

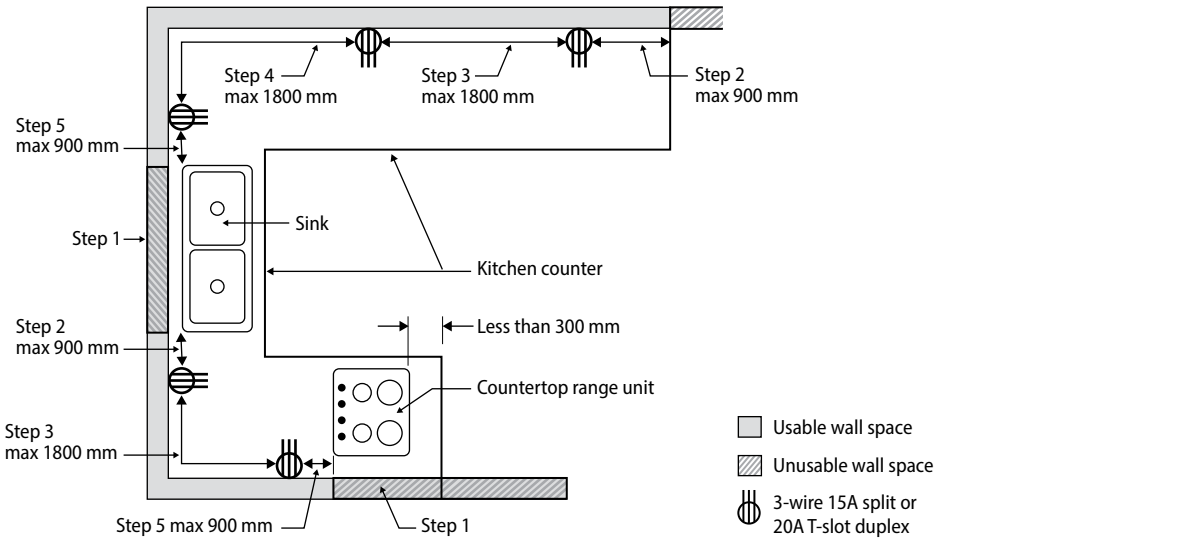

Outlet spacing is based on counter surface measurements.

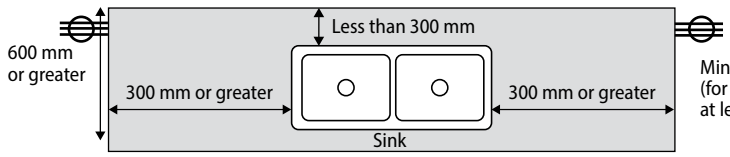

Minimum two receptacles are required
(for each counter space on either side of the sink,
at least one receptacle is required)

Copyright ©2026 The City of Calgary. This information has no legal status and cannot be used as an official interpretation of the various bylaws, codes and regulations currently in effect. The City of Calgary accepts no responsibility to persons relying solely on this information. This document is updated periodically.

Bathroom/washroom

- Install one outlet protected by a Class A Ground Fault Circuit Interrupter (GFCI) within 1m of the bathroom or washroom wash basin.

Laundry room

- Each laundry room requires an outlet in addition to the outlet provided for the washing machine. Not required for laundry closets.
- Dryer outlets are type 14-30R with #10/3 AWG cables.

Garage

- An outlet is required to be installed within 1 m of a garage door opener.
- Each car space in a garage requires one outlet.

Outdoor

- Outdoor outlets require covers approved for wet locations and must be marked extra duty.

Bedroom Layout Example

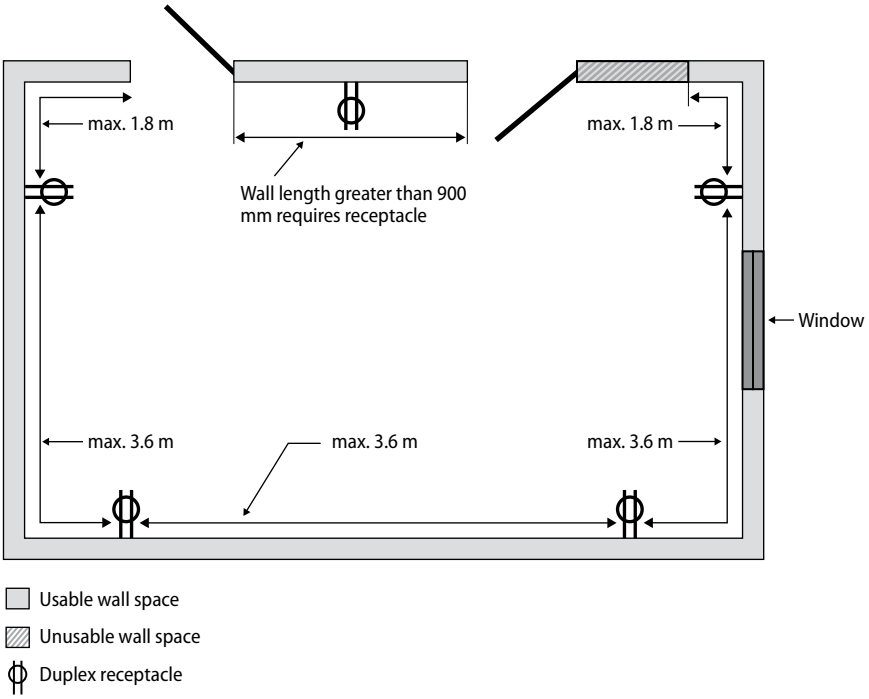

Branch Circuit wiring requirement

Flood maps (calgary.ca) if you are in a flood zone call 311 and ask to speak to the electrical Technical Assistance Centre

DO	DO NOT
▪ Have separate branch circuit for refrigerators and microwaves. ▪ Have electrical heat on a dedicated circuit. ▪ Have outdoor outlets on a separate circuit. ▪ Install smoke and carbon monoxide alarms on a hard wired 120V circuit, with at least one light. These must not be on a circuit protected by Arc fault or ground fault circuit interrupters unless equipped with an integral back up battery power source. Only a Building Safety Codes Officer can determine acceptable locations. ▪ Have at least one outlet on dedicated circuit for utility rooms. ▪ Have a dedicated circuit provided solely to supply power to each central vacuum system. ▪ The laundry room requires a dedicated circuit for the washing machine outlet. One additional convenience receptacle, located in the laundry room, can be fed from that circuit.	▪ Have more than 12 outlets on a circuit. ▪ Have more than two kitchen outlets on a 2 pole 15A circuit breaker or single pole 20A circuit breaker.

Copyright ©2026 The City of Calgary. This information has no legal status and cannot be used as an official interpretation of the various bylaws, codes and regulations currently in effect. The City of Calgary accepts no responsibility to persons relying solely on this information. This document is updated periodically.

Ground fault protection (GFCI)

- 15A and 20A outlets installed within 1.5 m of a sink, bathtub or shower must be GFCI protected.
- Exterior outlets within 2.5 m of finished grade must be GFCI protected (automotive heater and charging outlets are exempt).
- Hydro-massage and hot tubs must be Class A ground fault protected.
- Ground fault circuit interrupters must be installed in a location that will facilitate testing. They cannot be closer than 3 m to a hot tub and not closer than 1.5 m to a hydro-massage bathtub.
- The circuit supplying power to switches (including light switches, fan & heat controls) located between 500mm and 1m horizontally from a sink or shower stall shall be GFCI protected.
- Heating devices (i.e. baseboard heater/towel warmer) located less than 1.8 m above the floor and less than 1 m from a bathtub or shower stall shall be protected by a GFCI. Heating devices shall not be located closer than 500 mm to a bathtub or shower stall.
- A manually operated control (i.e. thermostat) for a heating device shall be permitted to be less than 1m from a sink (wash basin complete with a drainpipe) and not less than 500mm from a tub or shower stall, provided that it is protected by a ground fault circuit interrupter of the Class A type or supplied by an extra-low-voltage Class 2 circuit.

Typical outlet

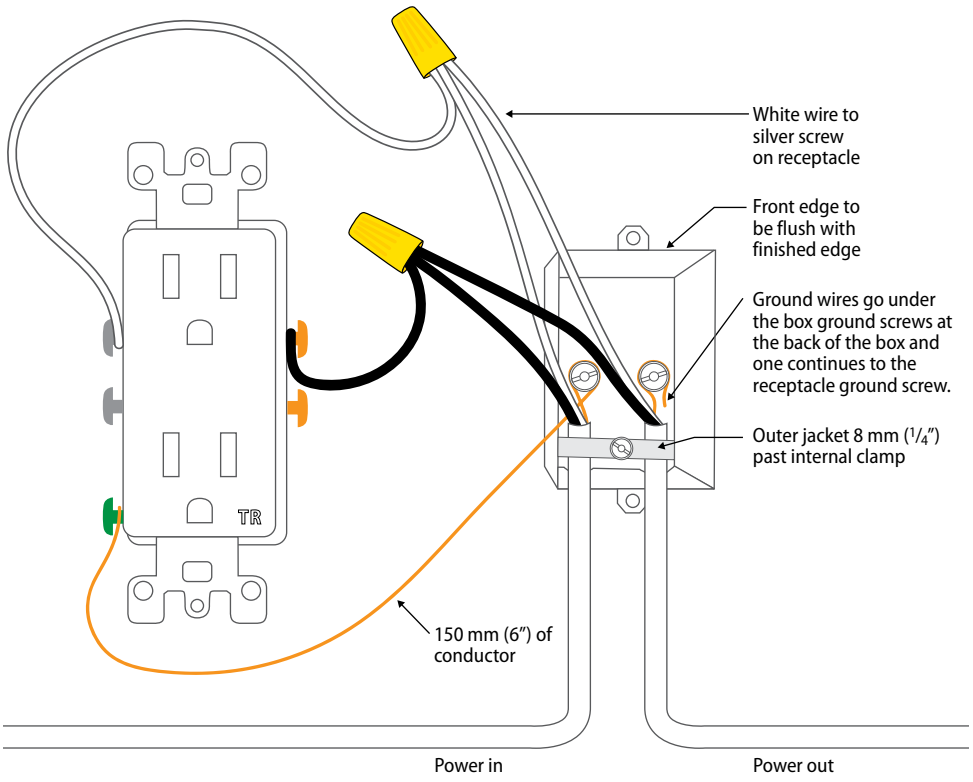

Copyright ©2026 The City of Calgary. This information has no legal status and cannot be used as an official interpretation of the various bylaws, codes and regulations currently in effect. The City of Calgary accepts no responsibility to persons relying solely on this information. This document is updated periodically.

Arc-fault protection

All branch circuits in a dwelling supplying 125V outlets rated 20A or less are to be protected by a combination-type arc-fault circuit interrupter (AFCI).

Only the following 15A or 20A outlets are excluded:

- Kitchen counter, island and peninsula outlets.
- Kitchen refrigerator outlet.
- A cord connected sump pump on a separate breaker (the sump pump must only be plugged into a single receptacle and labeled sump pump use only).
- The outlet located in the bathroom does not require combination AFCI protection, provided the outlet is located within 1m of the wash basin.

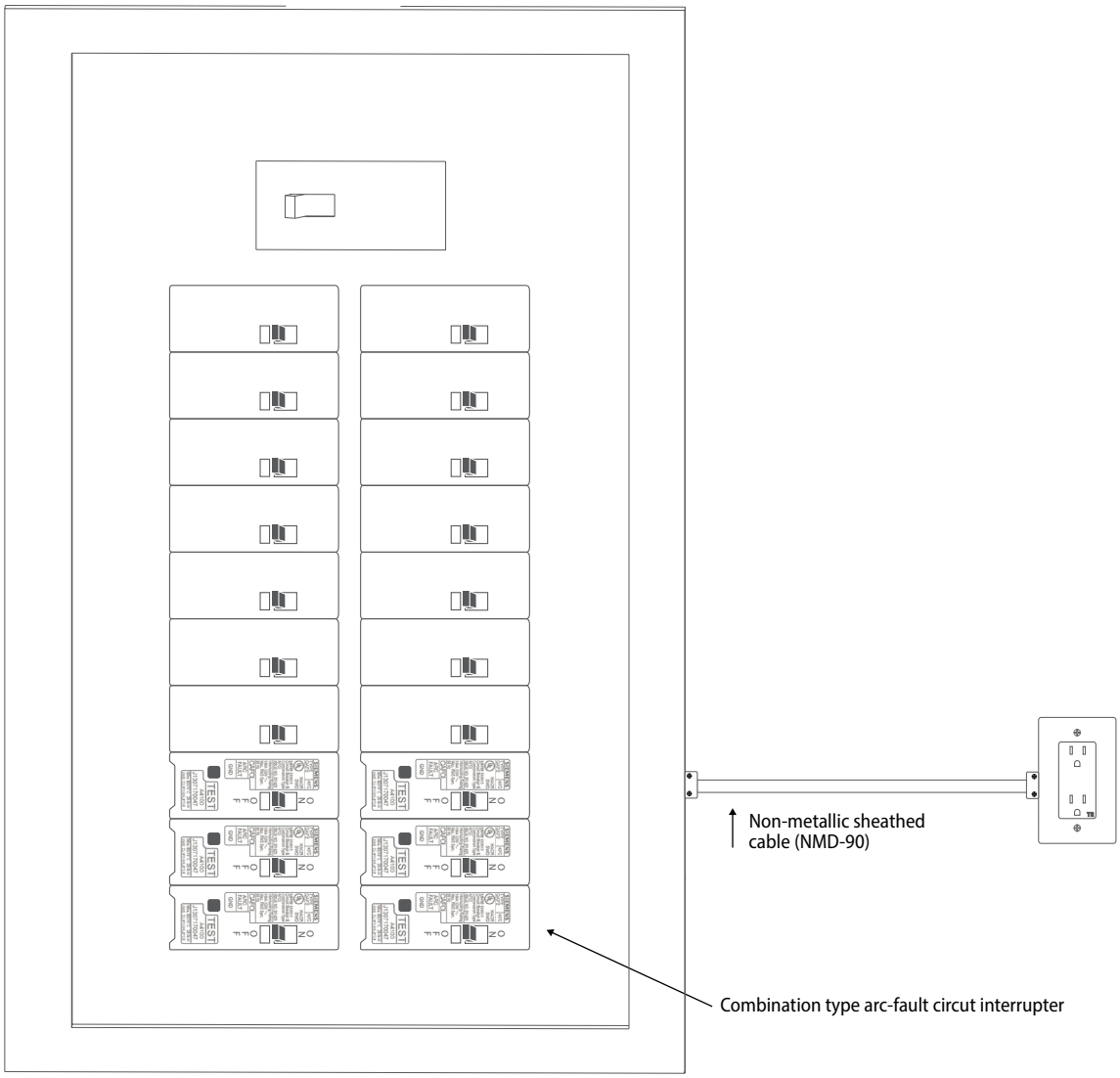

Copyright ©2026 The City of Calgary. This information has no legal status and cannot be used as an official interpretation of the various bylaws, codes and regulations currently in effect. The City of Calgary accepts no responsibility to persons relying solely on this information. This document is updated periodically.

Legacy panel, armoured cable

- When a dedicated circuit requires combination AFCI protection, a combination AFCI breaker or blank face device must be installed.
- Circuit breakers are required to be approved for use in the panelboard in which they will be installed. Combination type AFCI breakers are not available for many older panelboards and the wiring method described below is required.
- The branch circuit wiring from the panelboard to the blank face device or first outlet must be armoured cable (AC90) or approved electrical conduit. This is to add additional protection to the branch circuit wiring where breakers are not used.
- Where combination AFCI breakers are not used, blank face protectors and outlets are permitted with some restrictions.
- Each application has a preferred installation method based on level of protection and practicality.

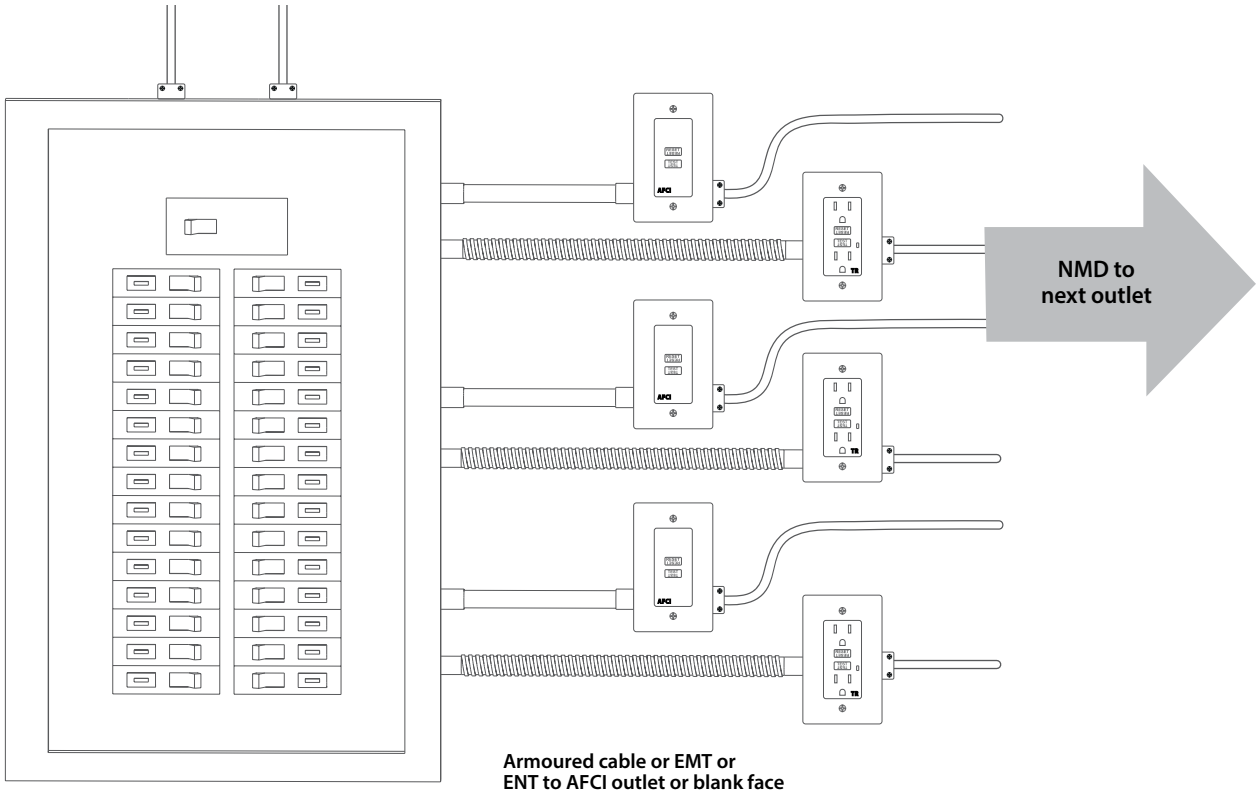

Copyright ©2026 The City of Calgary. This information has no legal status and cannot be used as an official interpretation of the various bylaws, codes and regulations currently in effect. The City of Calgary accepts no responsibility to persons relying solely on this information. This document is updated periodically.

Underground installations

Click before you dig: **www.albertaonecall.com/homeowners**

Direct buried conductors, cables or raceways must be installed to meet the minimum cover requirements. Distance measured is between finished grade and top of conduit or cable.

Wiring type	Non vehicle areas	Under vehicle traffic
Type NMWU direct buried **	600mm	900mm
Type NMWU in rigid PVC	450mm	600mm
Armoured cable (TECK90)	450mm	600mm

** Screened sand or screened backfill required.

Cables or conductors installed underground in a PVC conduit must be acceptable for use in wet locations (NMD90 is not acceptable).

- Protect cables exiting from underground from mechanical damage by location or by rigid PVC conduit.
- Gas lines (i.e. house to garage) are the homeowner's responsibility. When electrical conductors are installed in the same trench, the two systems must be separated by 300 mm horizontally.
- Direct buried conductors, cables or raceways must be exposed for inspection.
- To prevent damage to the conductors or the electrical equipment, use a conduit expansion joint where underground PVC conduits or cables could be affected by settlement or frost.
- Do not place backfill containing large rock, paving materials, cinders, large or sharply angular substances or corrosive material where it may damage or corrode cables or conduits and prevent adequate compaction of the soil.
- Expansion joint note - all underground PVC conduits require expansion joints on both sides of the conduit run where the conduit is not below the 1.3m frost level.

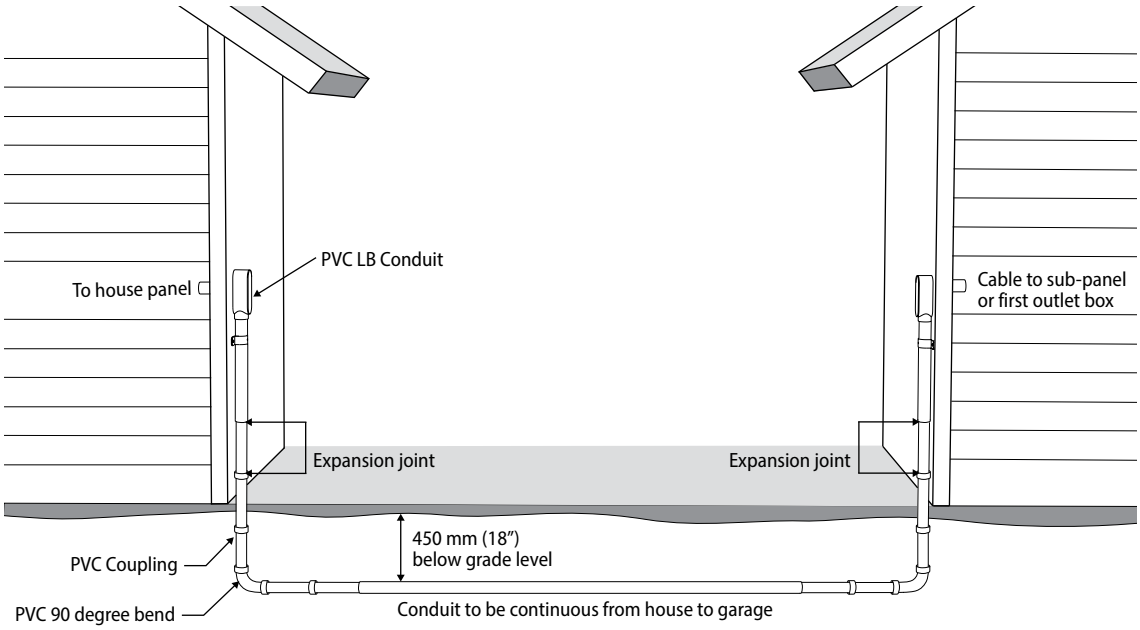

NOTE:

Underground conduits that enter the building are to be sealed with a suitable compound to prevent the entrance of moisture or gases into the building.

Other underground wiring methods are accepted by the Canadian Electrical Code. NMD 90 cable is not acceptable for underground installations.

Copyright ©2026 The City of Calgary. This information has no legal status and cannot be used as an official interpretation of the various bylaws, codes and regulations currently in effect. The City of Calgary accepts no responsibility to persons relying solely on this information. This document is updated periodically.

Use of approved electrical equipment

Electrical products and equipment must be approved by a Certification body, recognized by the Standards Council of Canada. Refer to the Alberta Electrical Safety STANDATA (Leg-ECR-002) found on the Alberta Municipal Affairs website.

www.electrofed.com
www.scc.ca

Certificaton Mark Examples

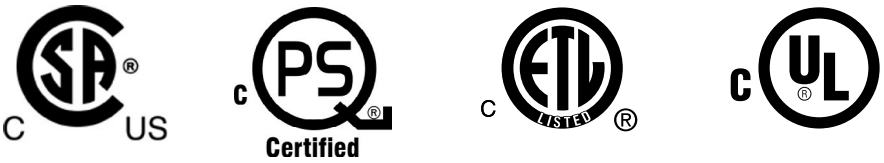

Inspection Label Examples





Copyright ©2026 The City of Calgary. This information has no legal status and cannot be used as an official interpretation of the various bylaws, codes and regulations currently in effect. The City of Calgary accepts no responsibility to persons relying solely on this information. This document is updated periodically.

In-floor heating raceway requirements

The non-heating leads of an in-floor heating device set may be required to be run in a raceway. The raceway is required to be installed from the box that will house the thermostat, to the floor. The raceway is required to terminate no more than 50mm from the ground where the non-heating leads are contained within a wooden base plate and effectively protected from mechanical damage. A box that will accept a connector is required to be installed for the thermostat. The manufacturer's installation instructions are to be followed and provided for inspection.

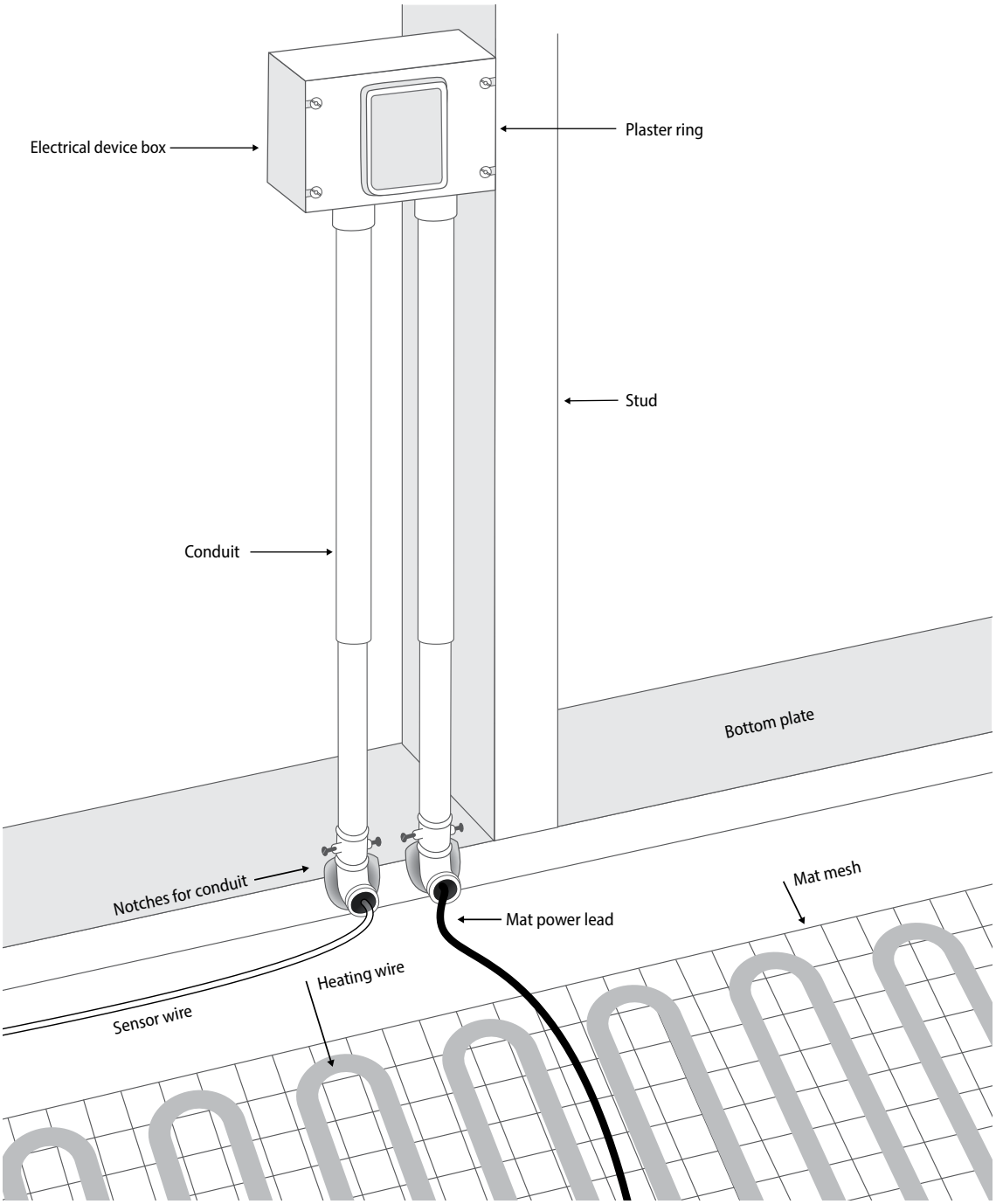

Copyright ©2026 The City of Calgary. This information has no legal status and cannot be used as an official interpretation of the various bylaws, codes and regulations currently in effect. The City of Calgary accepts no responsibility to persons relying solely on this information. This document is updated periodically.